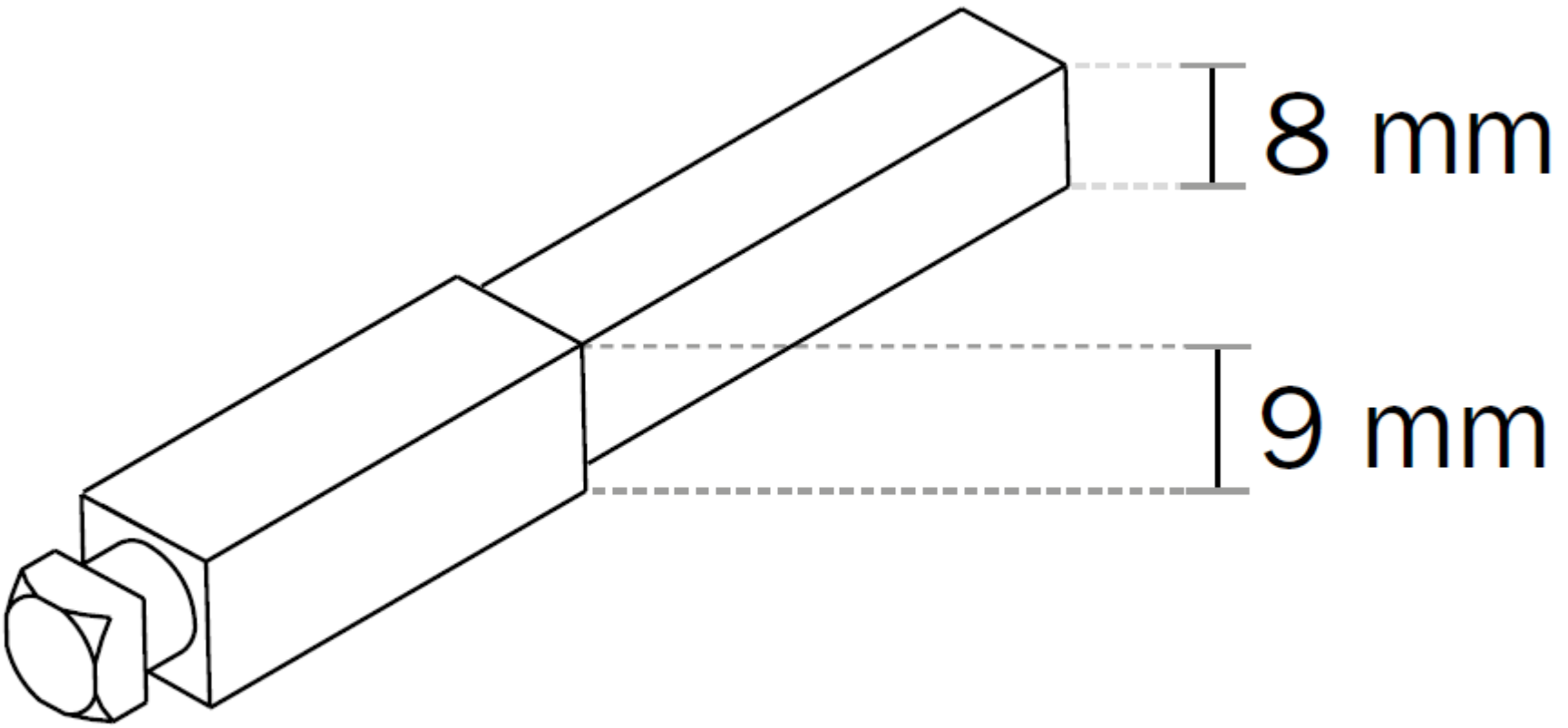
8 mm
9 mm