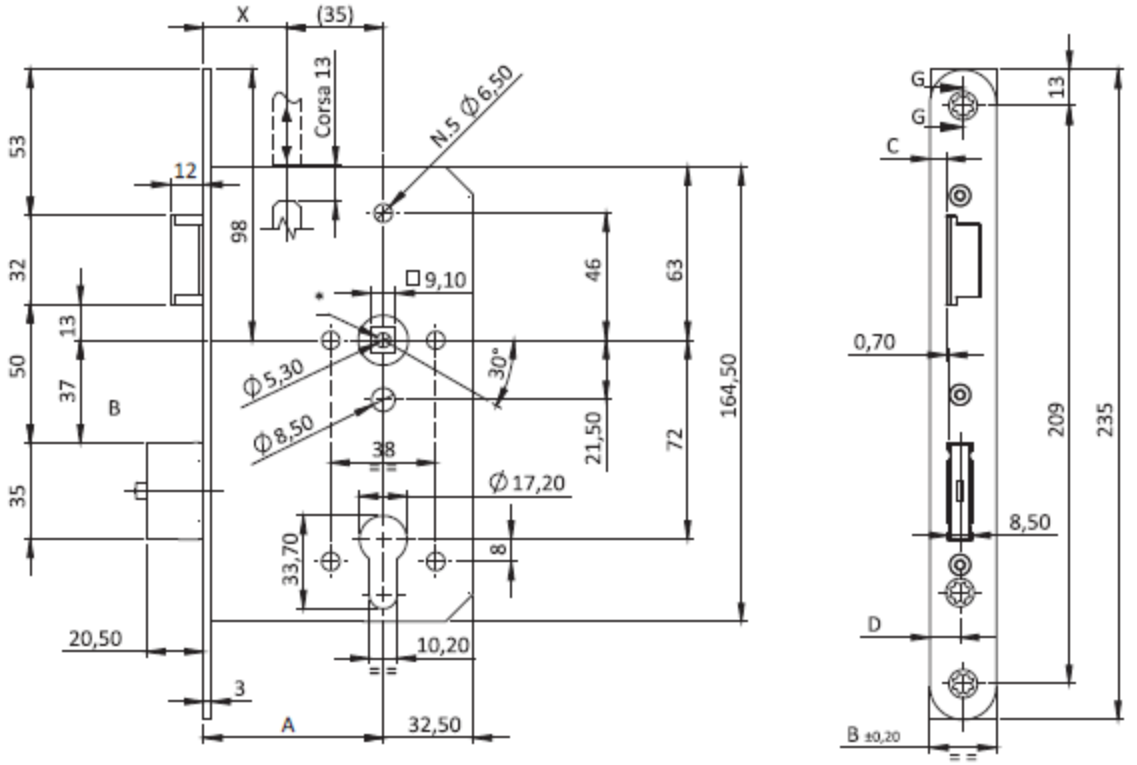

2-point lock for rods

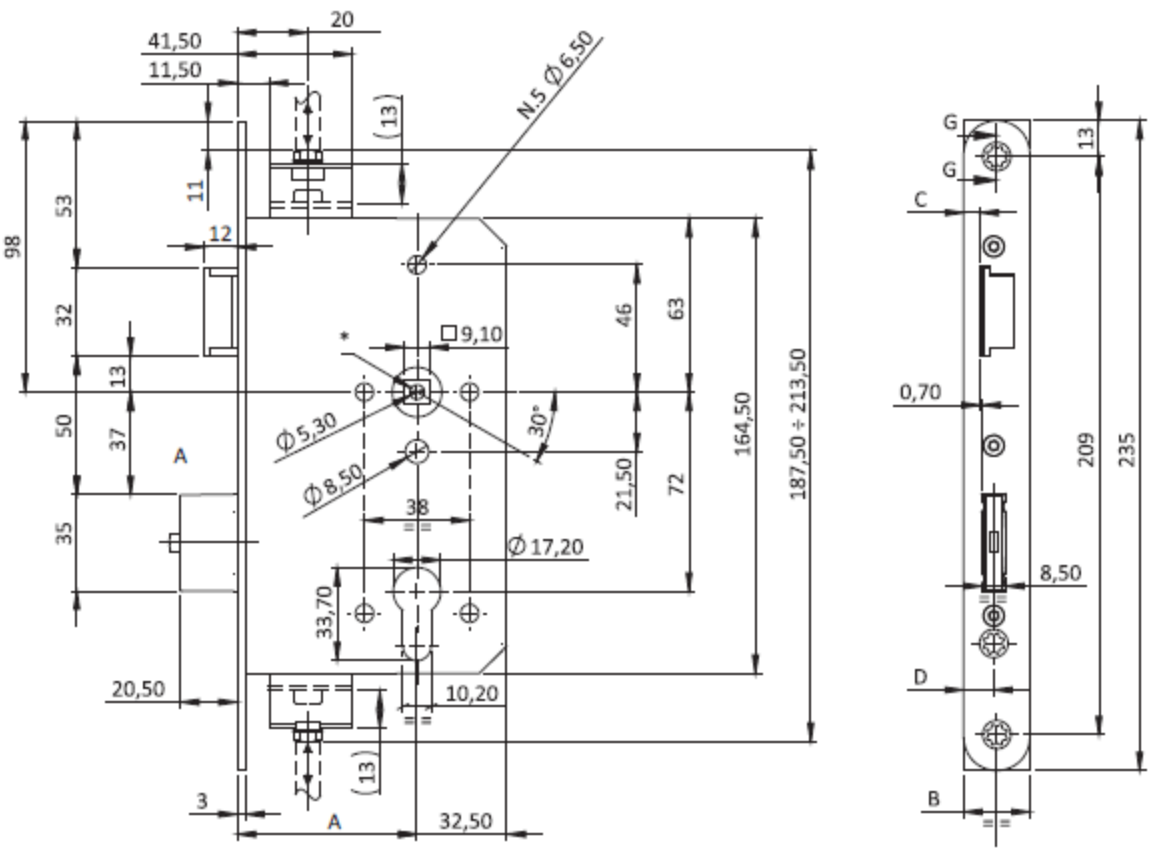

3-point lock for rods