TIPO/TYPE	B
207553.Z-217553.Z	55

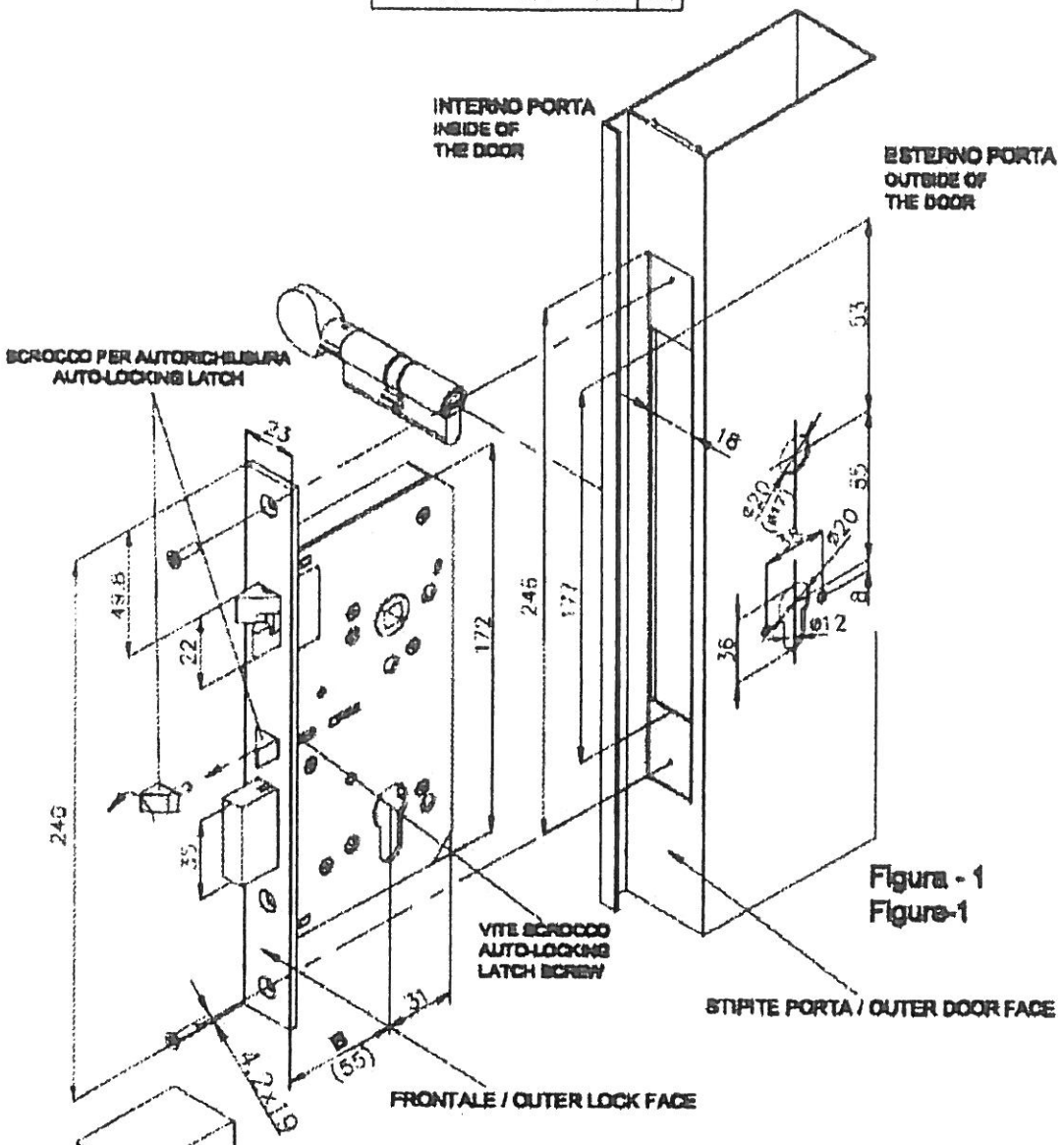

Figura - 1
Figure-1

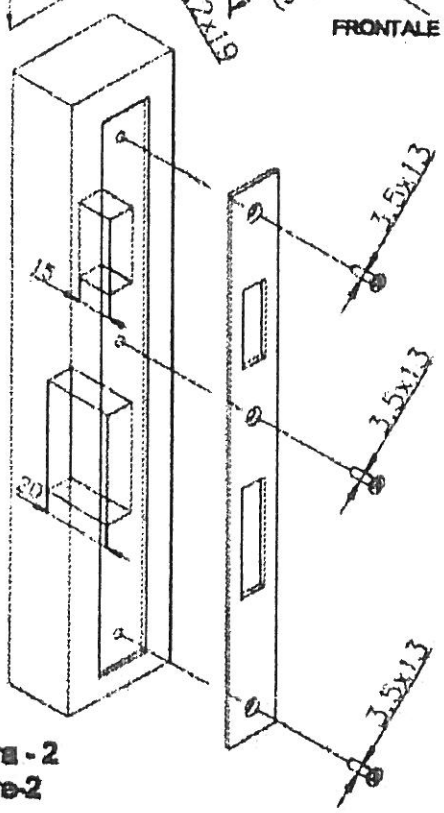

Figura - 2
Figure-2

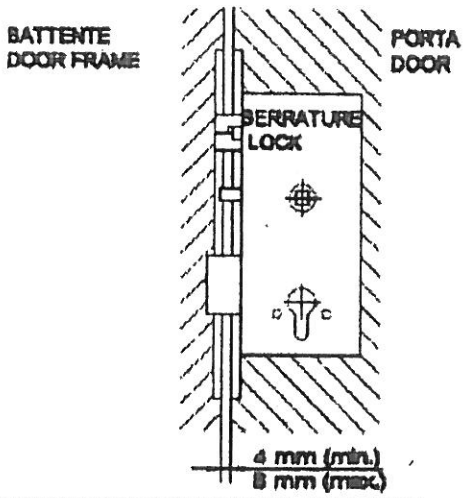

SPAZIO NECESSARIO TRA PORTA E BATTENTE
NECESSARY GAP BETWEEN THE DOOR AND
DOOR FRAME