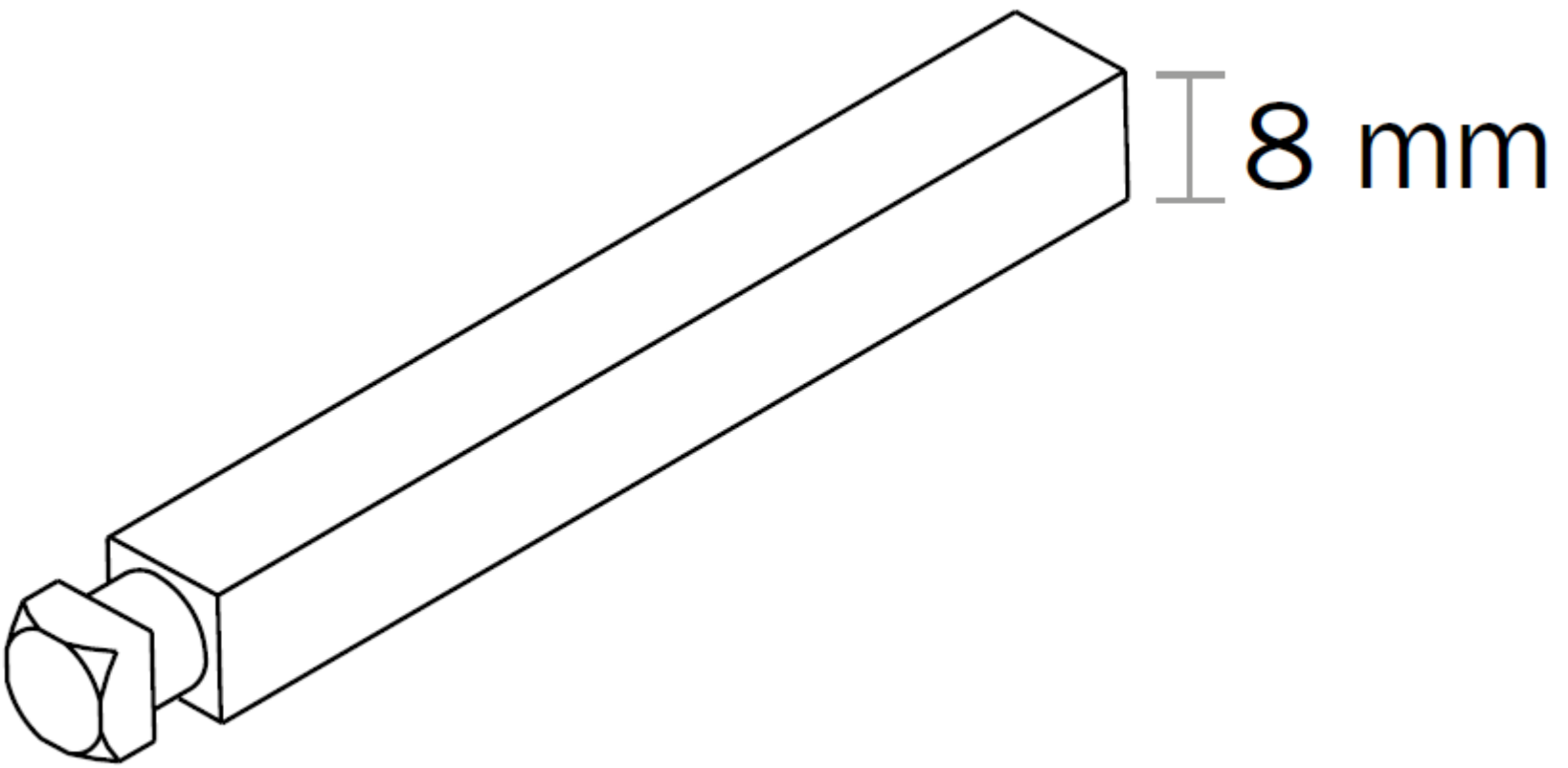
8 mm