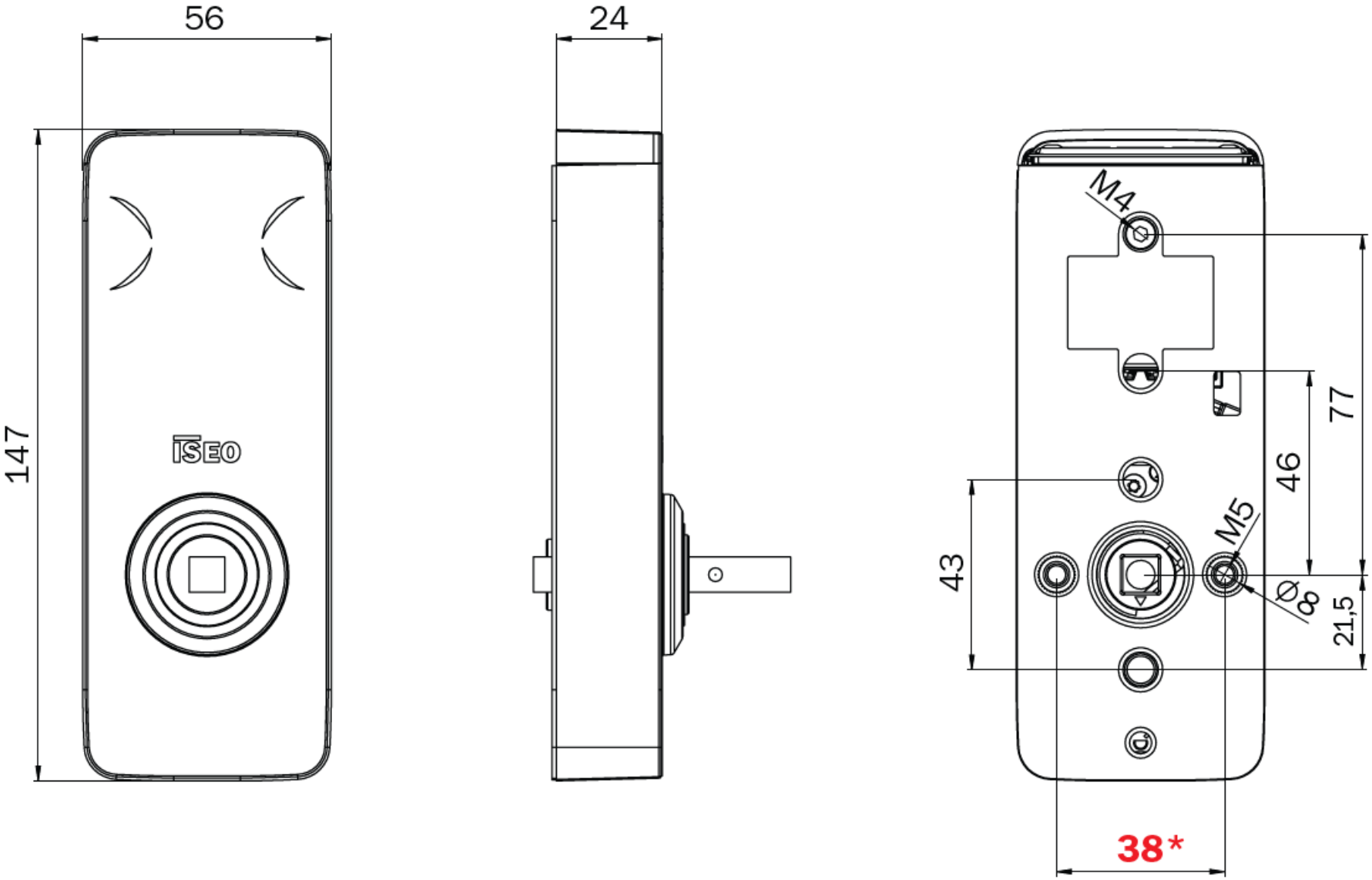

*DIN Holes